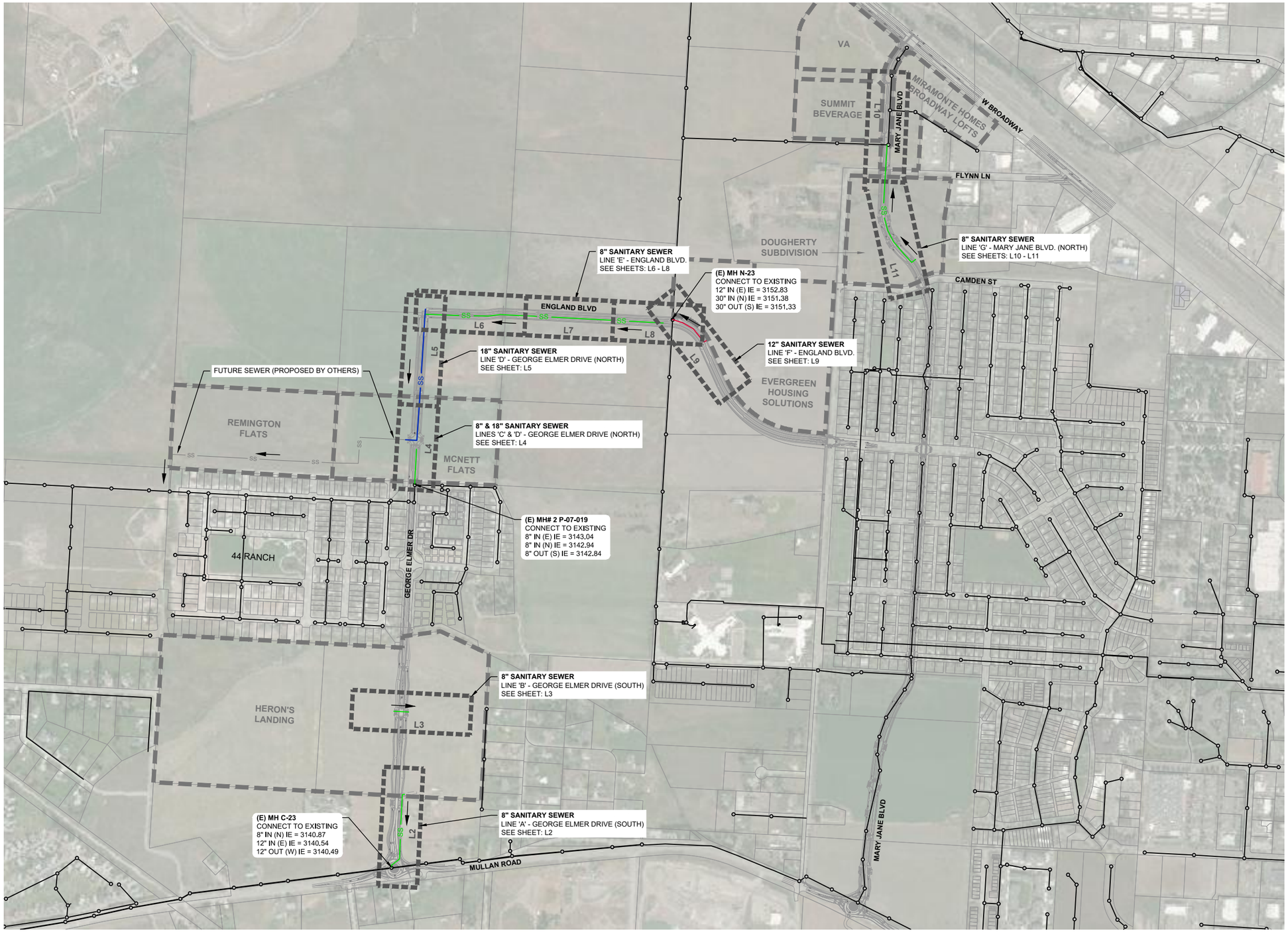

0 400 800
SCALE IN FEET

CALL UTILITY NOTIFICATION CENTER OF MONTANA
811
CALL FOR THE MARKING OF UNDERGROUND UTILITIES **2 BUSINESS DAYS BEFORE** YOU DIG, GRADE, OR EXCAVATE

SHEET INDEX

L1	COVER SHEET & SHEET INDEX
L2	LINE 'A' - GEORGE ELMER DRIVE (SOUTH)
L3	LINE 'B' - GEORGE ELMER DRIVE (SOUTH)
L4	LINES 'C' & 'D' - GEORGE ELMER DRIVE (NORTH)
L5	LINE 'D' - GEORGE ELMER DRIVE (NORTH)
L6	LINE 'E' - ENGLAND BLVD.
L7	LINE 'E' - ENGLAND BLVD.
L8	LINE 'E' - ENGLAND BLVD.
L9	LINE 'F' - ENGLAND BLVD.
L10	LINE 'G' - MARY JANE BLVD. (NORTH)
L11	LINE 'G' - MARY JANE BLVD. (NORTH)
L12	MANHOLE SCHEDULE
L13	STANDARD SEWER DETAILS - 1
L14	STANDARD SEWER DETAILS - 2

LEGEND

- SS — 8" SEWER
- SS — 12" SEWER
- SS — 18" SEWER
- SS — FUTURE SEWER (PROPOSED BY OTHERS)
- EXISTING

NOTES:

1. (E) DESIGNATES AN EXISTING MANHOLE

SEWER CONSTRUCTION NOTES:

1. ALL WORK SHALL BE IN ACCORDANCE WITH THE CITY OF MISSOULA PUBLIC WORKS STANDARDS & SPECIFICATIONS (MCPWSS) AND MULLAN BUILD SPECIFICATIONS, IF ANY.
2. INVERT ELEVATIONS ARE PROVIDED FROM CENTER OF MANHOLE, UNLESS NOTED OTHERWISE.
3. MANHOLE STATIONS ARE PROVIDED FROM CENTER OF MANHOLE, UNLESS NOTED OTHERWISE.
4. SEWER SERVICES SHALL BE CONSTRUCTED AND INSPECTED PER INTERNATIONAL PLUMBING CODE, AND CITY OF MISSOULA STANDARDS FOR DESIGN AND CONSTRUCTION.
5. 2" THICKNESS CLOSED CELL INSULATION BOARD PER AASHTO M230-70 SHALL BE USED WHERE COVER OVER SANITARY SEWER IS LESS THAN 5'. INSULATION MUST BE LAID AT SAME WIDTH OF EXCAVATED TRENCH.

MONTANA DANIEL J. HAYNION No. 8101 PE REGISTERED PROFESSIONAL ENGINEER

REVISION	DATE	DESCRIPTION
-	-	-

DESIGNER DH PROJ. NO. 7065
DRAWN JW DATE 04/12/2021
CHECKED CC SURVEYED DJ&A, P.C.

HDR

MULLAN BUILD - SANITARY SEWER UTILITY
100% - BID PLANS

COVER SHEET & SHEET INDEX

SHEET L1 OF L14

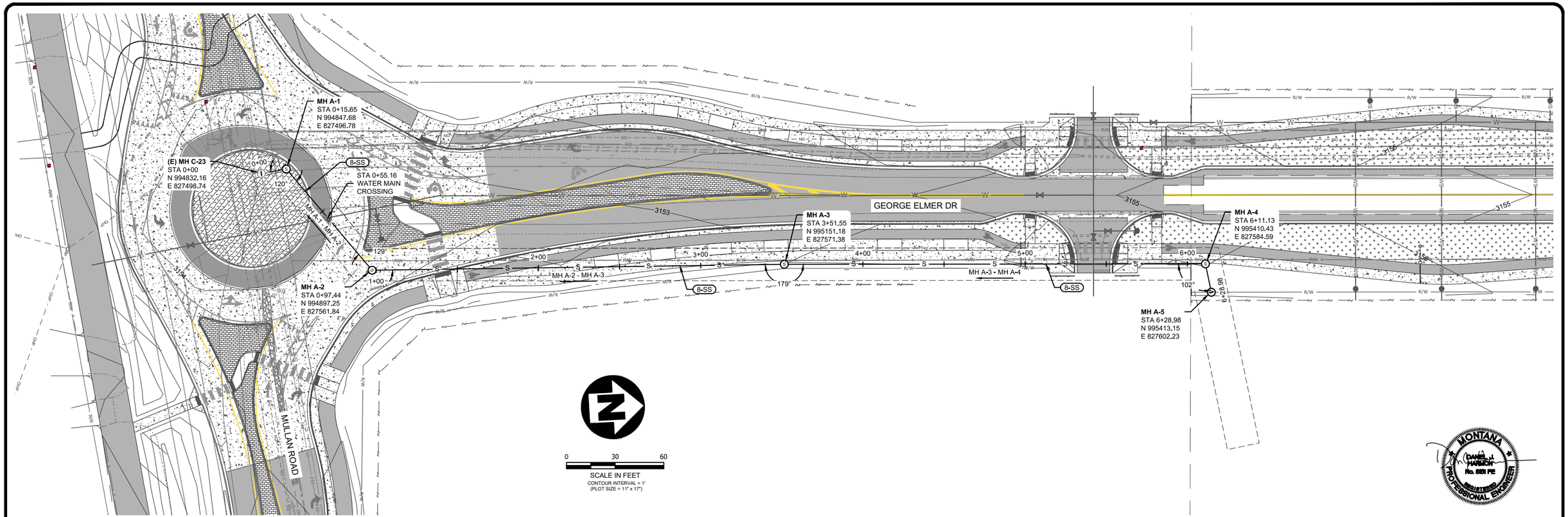

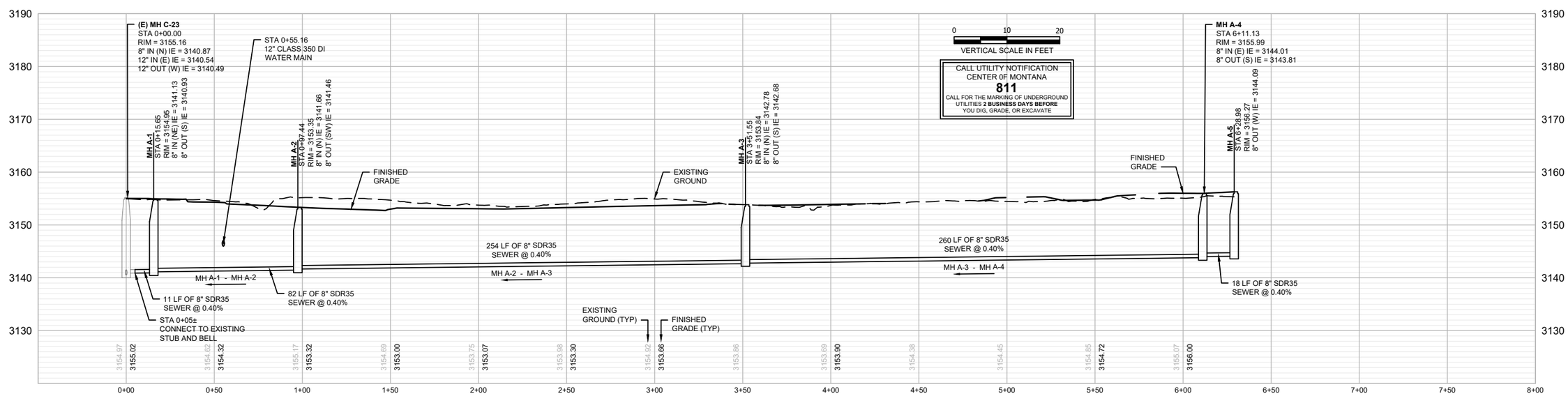

REVISION	DATE	DESCRIPTION
-	-	-

DESIGNER DH PROJ. NO. 7065
DRAWN JW DATE 04/12/2021
CHECKED CC SURVEYED DJ&A, P.C.

HDR

MULLAN BUILD - SANITARY SEWER UTILITY
100% - BID PLANS

LINE 'A' - GEORGE ELMER DRIVE (SOUTH)

SHEET L2 OF L14

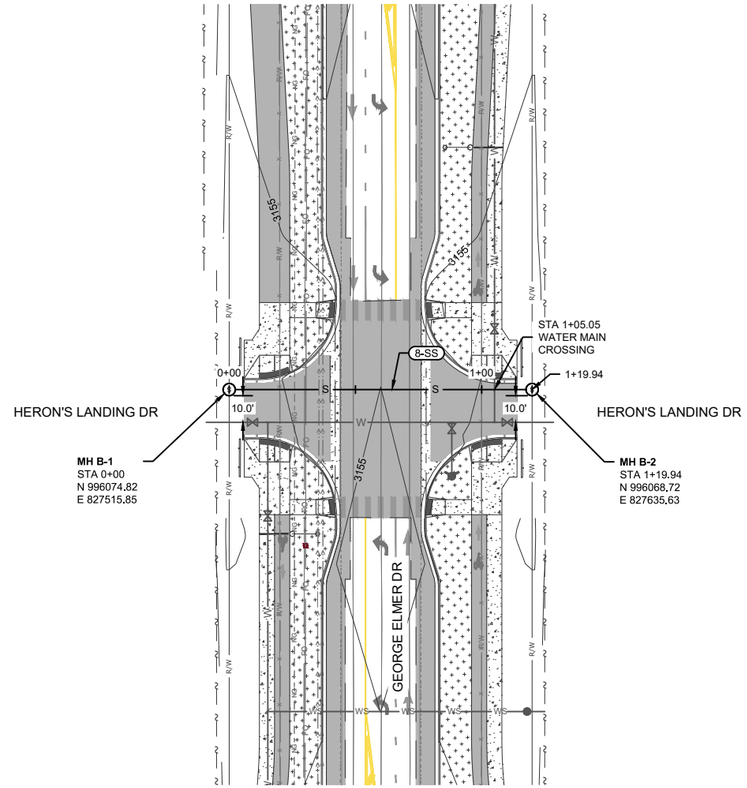

0 30 60

SCALE IN FEET

CONTOUR INTERVAL = 1'

(PLOT SIZE = 11" x 17")

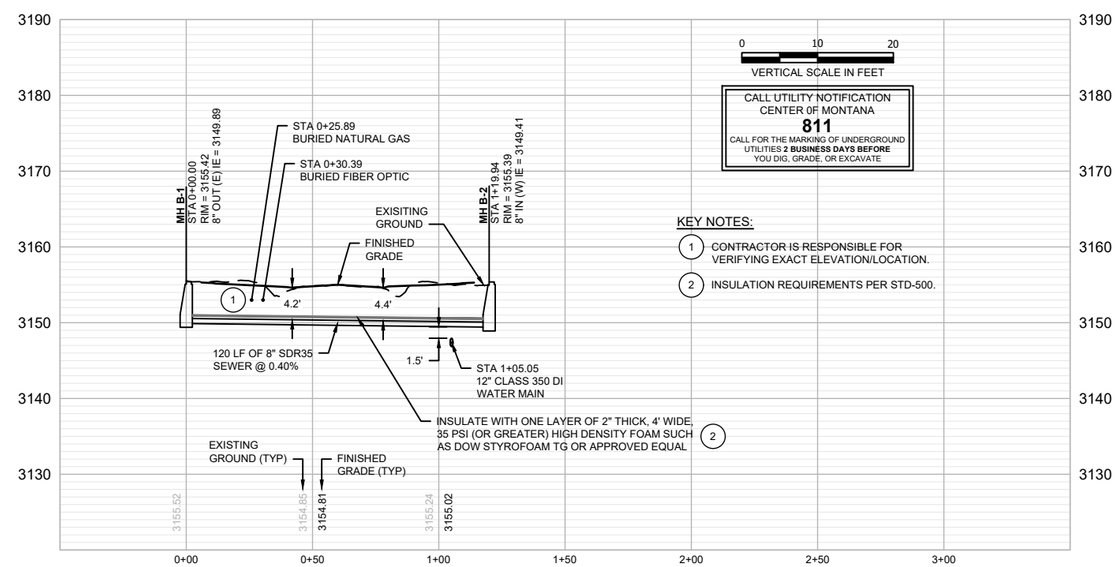

0 10 20

VERTICAL SCALE IN FEET

CALL UTILITY NOTIFICATION
CENTER OF MONTANA
811
CALL FOR THE MARKING OF UNDERGROUND
UTILITIES **2 BUSINESS DAYS BEFORE**
YOU DIG, GRADE, OR EXCAVATE

KEY NOTES:

1. CONTRACTOR IS RESPONSIBLE FOR VERIFYING EXACT ELEVATION/LOCATION.
2. INSULATION REQUIREMENTS PER STD-500.

MONTANA
DANIEL J. HARMON
No. 8101 PE
REGISTERED
PROFESSIONAL ENGINEER

REVISION	DATE	DESCRIPTION
-	-	-

DESIGNER DH PROJ. NO. 7065
DRAWN JW DATE 04/12/2021
CHECKED CC SURVEYED DJ&A, P.C.

HDR

MULLAN BUILD - SANITARY SEWER UTILITY
100% - BID PLANS

LINE 'B' - GEORGE ELMER DRIVE (SOUTH)

SHEET L3 OF L14

KEY NOTES:

1. SEWER SERVICE PER STD-520 (TYP)
2. CONTRACTOR IS RESPONSIBLE FOR VERIFYING EXACT ELEVATION/LOCATION.

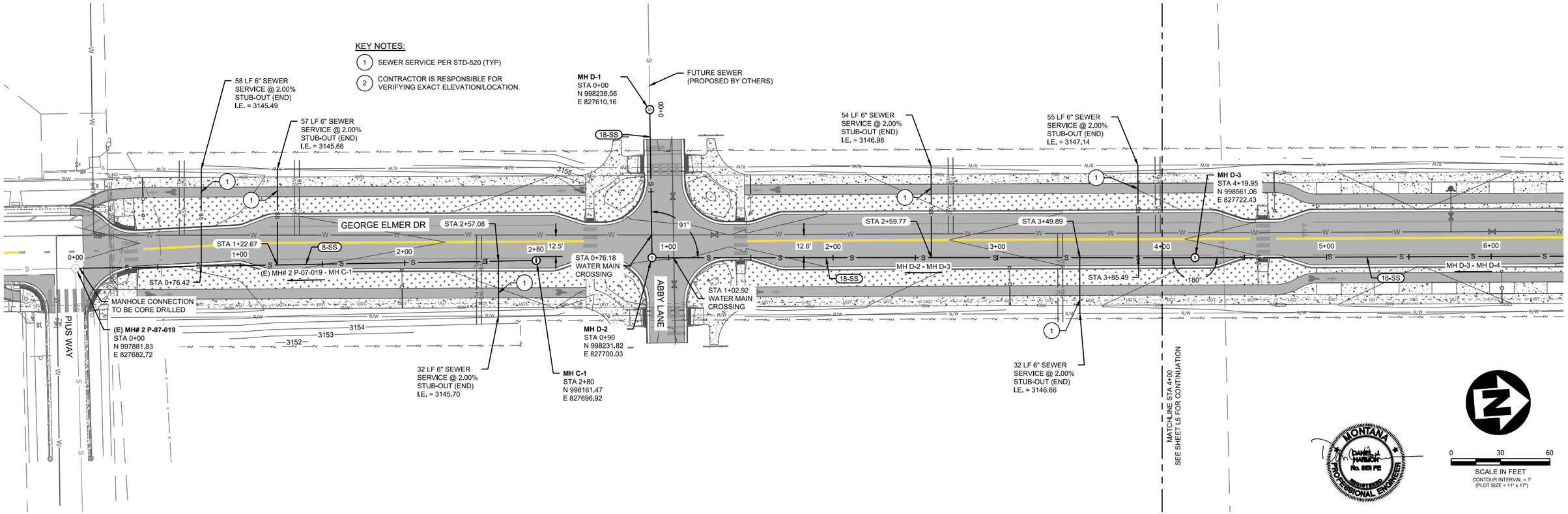

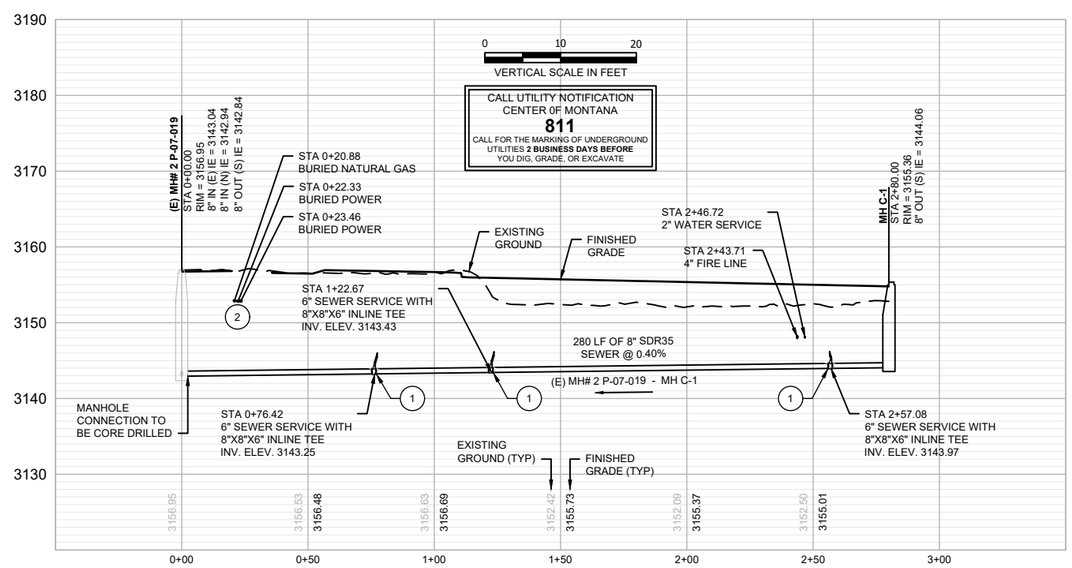

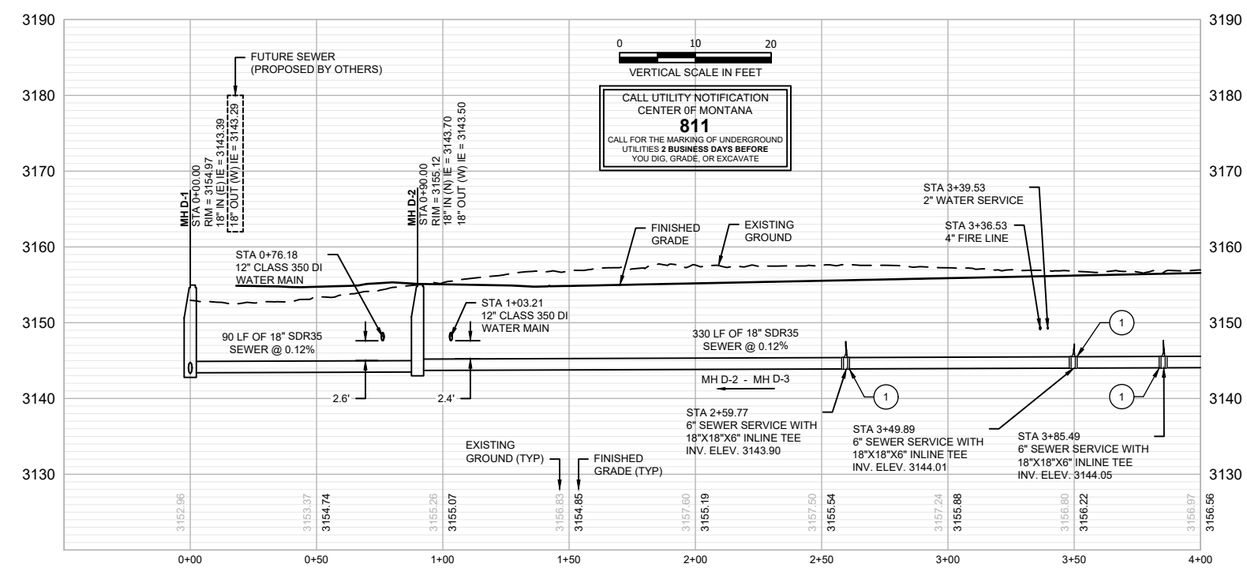

REVISION	DATE	DESCRIPTION
-	-	-

DESIGNER DH PROJ. NO. 7065
DRAWN JW DATE 04/12/2021
CHECKED CC SURVEYED DJ&A, P.C.

MULLAN BUILD - SANITARY SEWER UTILITY
100% - BID PLANS

LINES 'C' & 'D' - GEORGE ELMER DRIVE (NORTH)

SHEET L4 OF L14

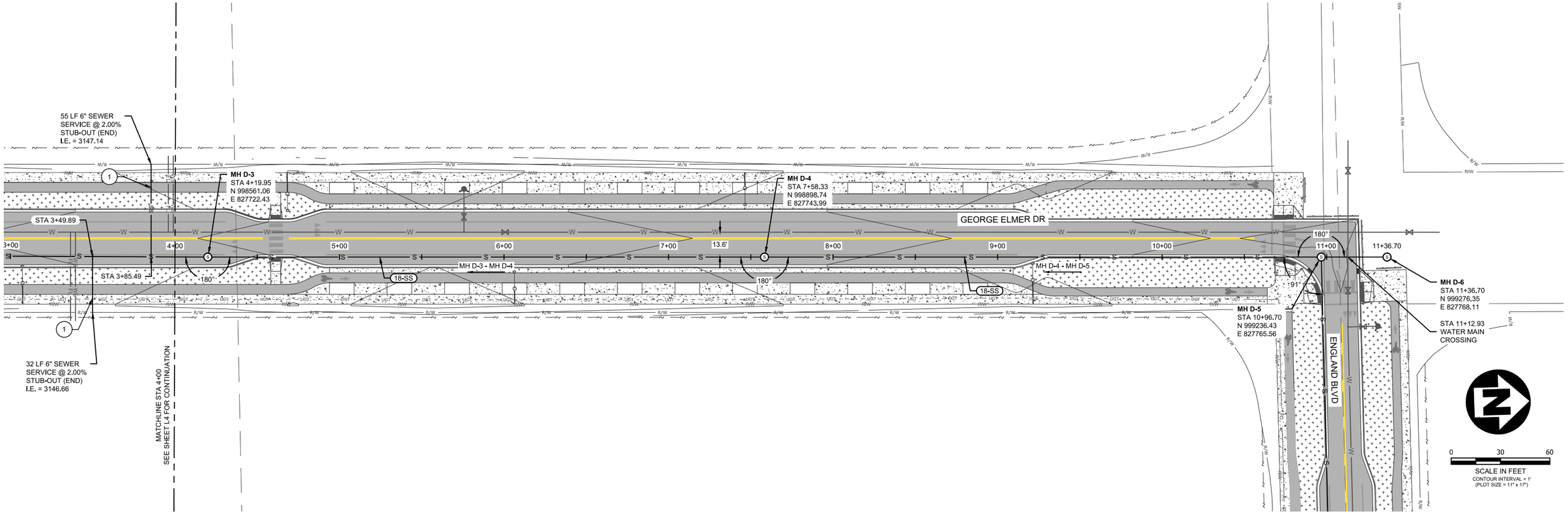

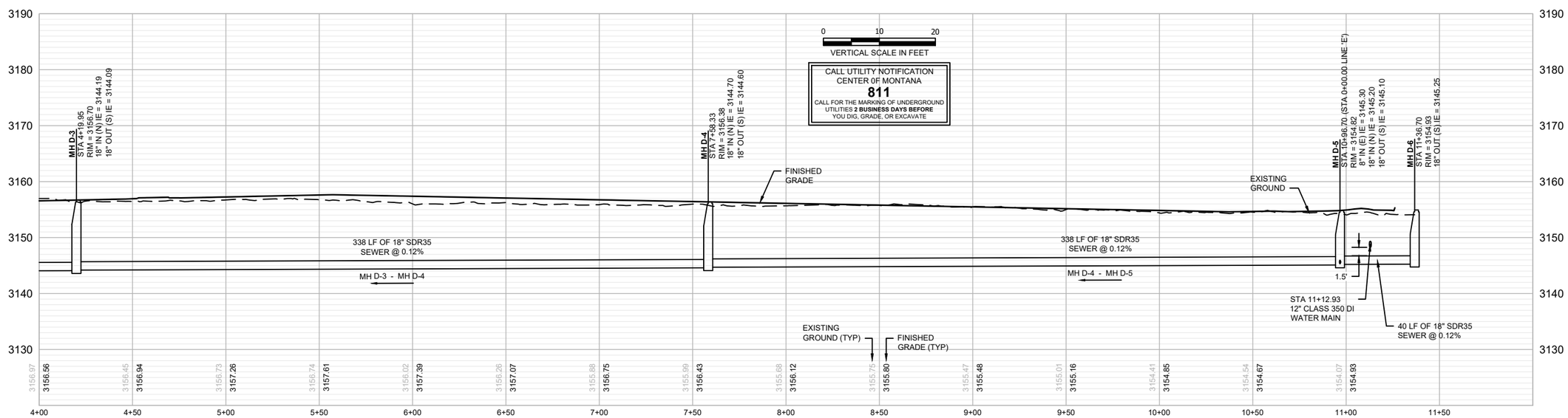

REVISION	DATE	DESCRIPTION
-	-	-

DESIGNER DH PROJ. NO. 7065
DRAWN JW DATE 04/12/2021
CHECKED CC SURVEYED DJ&A, P.C.

HDR

MULLAN BUILD - SANITARY SEWER UTILITY
100% - BID PLANS

LINE 'D' - GEORGE ELMER DRIVE (NORTH)

SHEET L5 OF L14

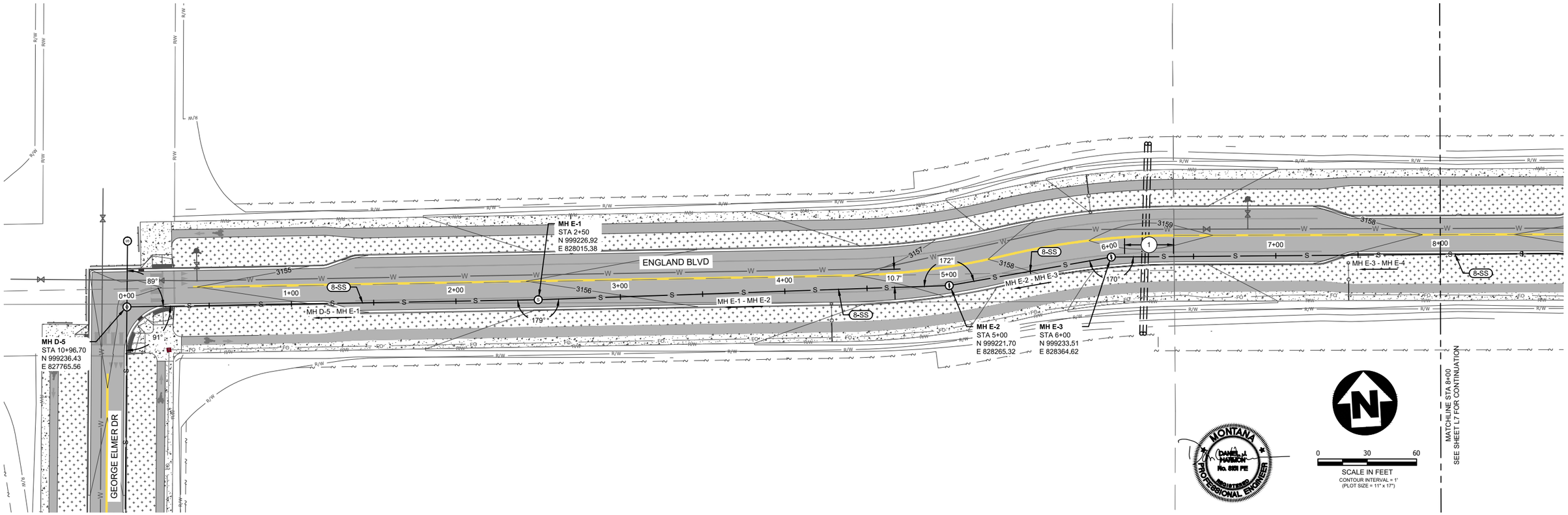

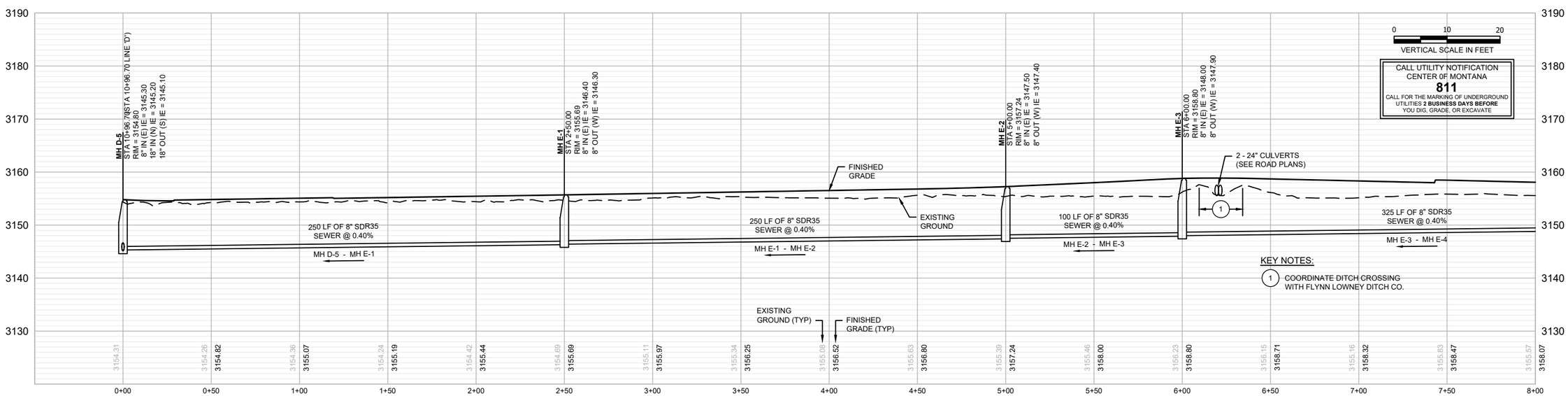

REVISION	DATE	DESCRIPTION
-	-	-

DESIGNER DH PROJ. NO. 7065
DRAWN JW DATE 04/12/2021
CHECKED CC SURVEYED DJ&A, P.C.

HDR

MULLAN BUILD - SANITARY SEWER UTILITY
100% - BID PLANS

LINE 'E' - ENGLAND BLVD.

SHEET L6 OF L14

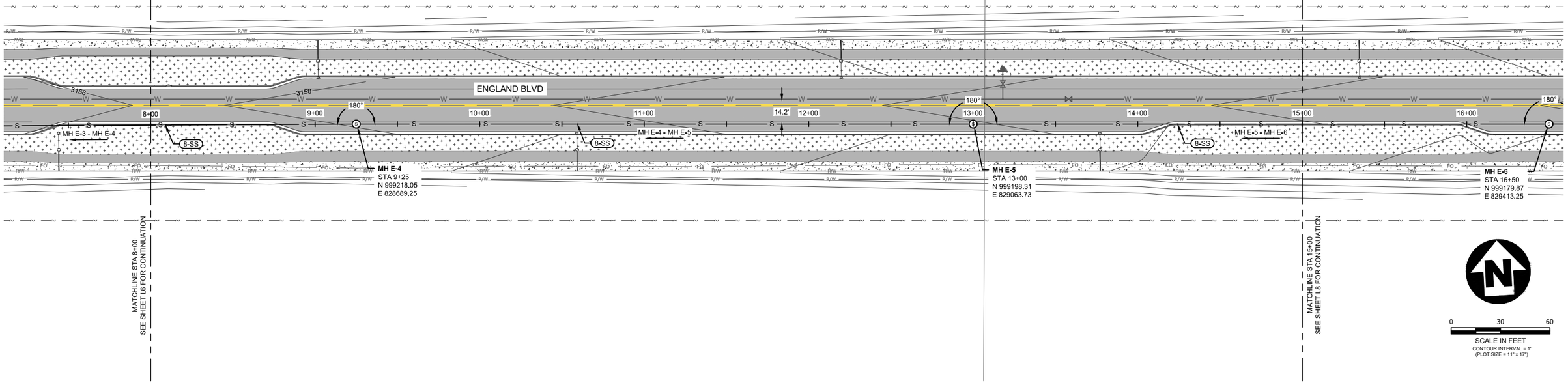

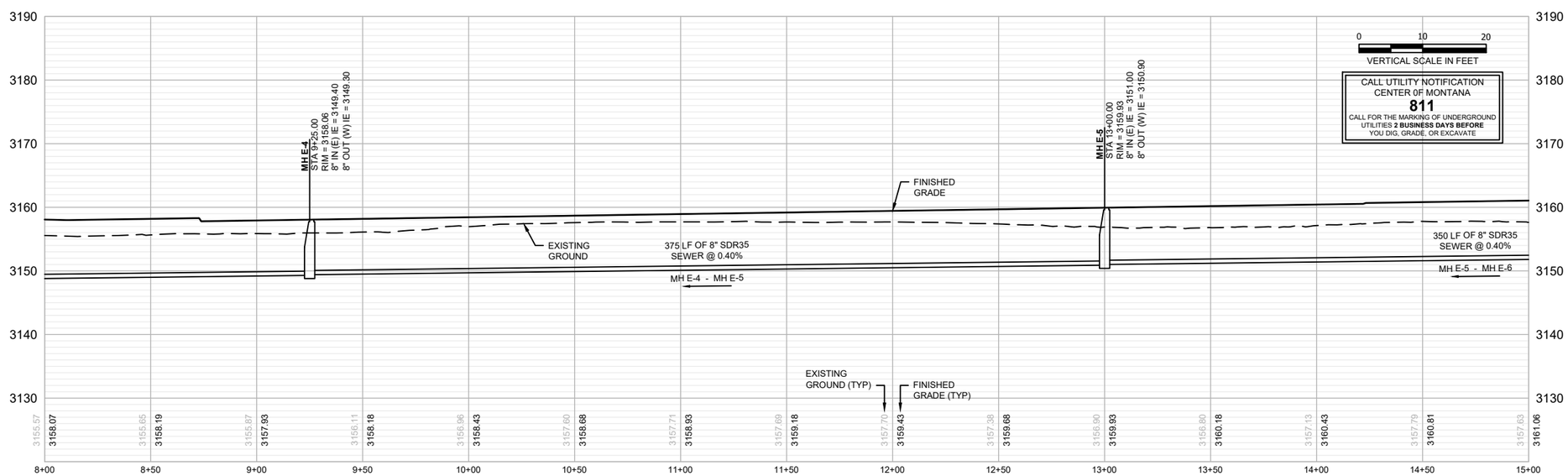

CALL UTILITY NOTIFICATION CENTER OF MONTANA
811
CALL FOR THE MARKING OF UNDERGROUND UTILITIES **2 BUSINESS DAYS BEFORE** YOU DIG, GRADE, OR EXCAVATE

MONTANA DANIEL J. HAMMON No. 9821 PE REGISTERED PROFESSIONAL ENGINEER

REVISION	DATE	DESCRIPTION
-	-	-

DESIGNER DH PROJ. NO. 7065
DRAWN JW DATE 04/12/2021
CHECKED CC SURVEYED DJ&A, P.C.

HDR

MULLAN BUILD - SANITARY SEWER UTILITY
100% - BID PLANS

LINE 'E' - ENGLAND BLVD.

SHEET L7 OF L14

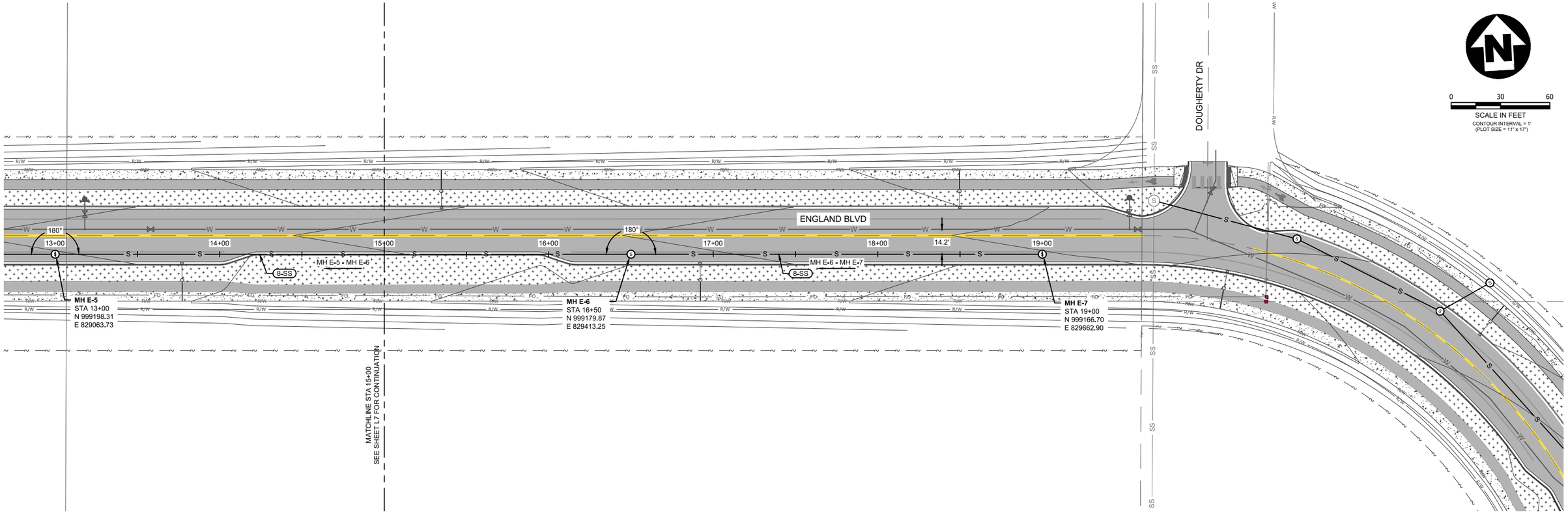

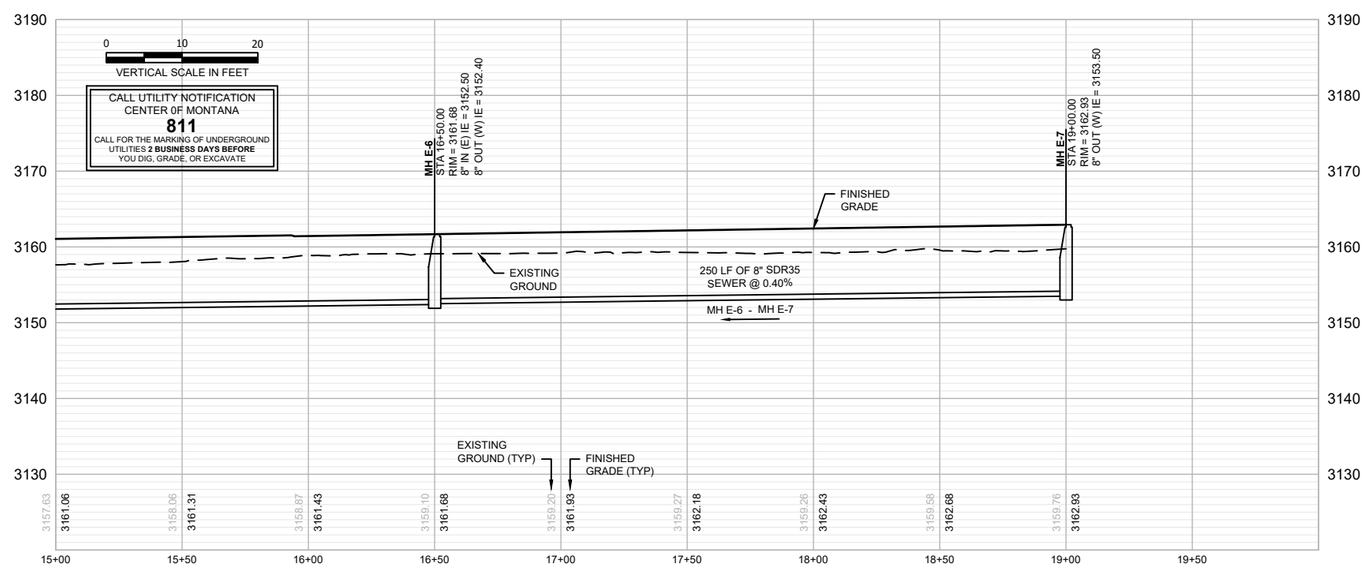

REVISION	DATE	DESCRIPTION
-	-	-

DESIGNER DH PROJ. NO. 7065
DRAWN JW DATE 04/12/2021
CHECKED CC SURVEYED DJ&A, P.C.

HDR

MULLAN BUILD - SANITARY SEWER UTILITY
100% - BID PLANS

LINE 'E' - ENGLAND BLVD.

SHEET L8 OF L14

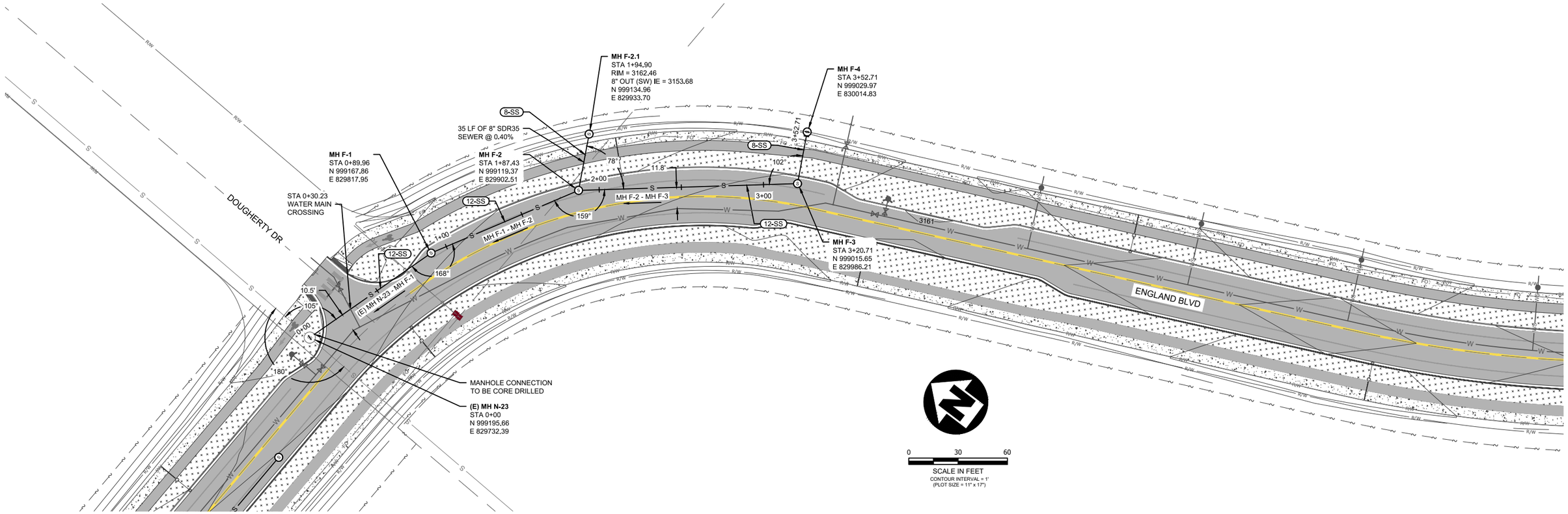

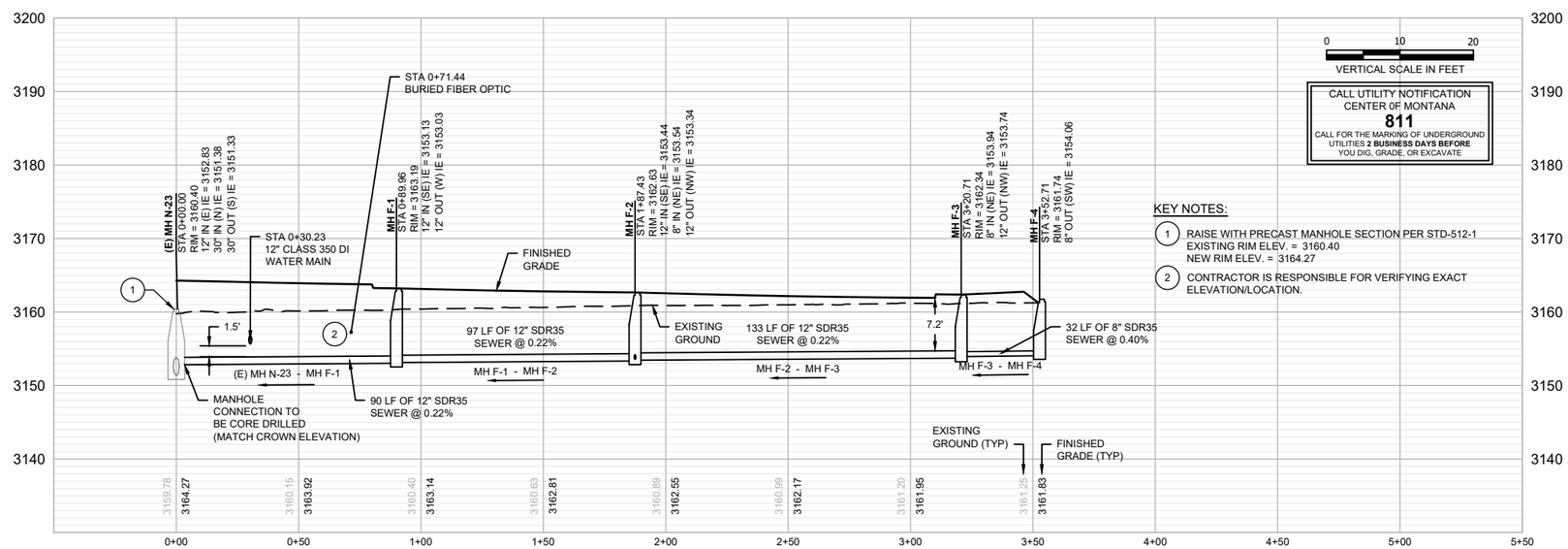

REVISION	DATE	DESCRIPTION
-	-	-

DESIGNER DH PROJ. NO. 7065
DRAWN JW DATE 04/12/2021
CHECKED CC SURVEYED DJ&A, P.C.

HDR

MULLAN BUILD - SANITARY SEWER UTILITY
100% - BID PLANS

LINE 'F' - ENGLAND BLVD.

SHEET L9 OF L14

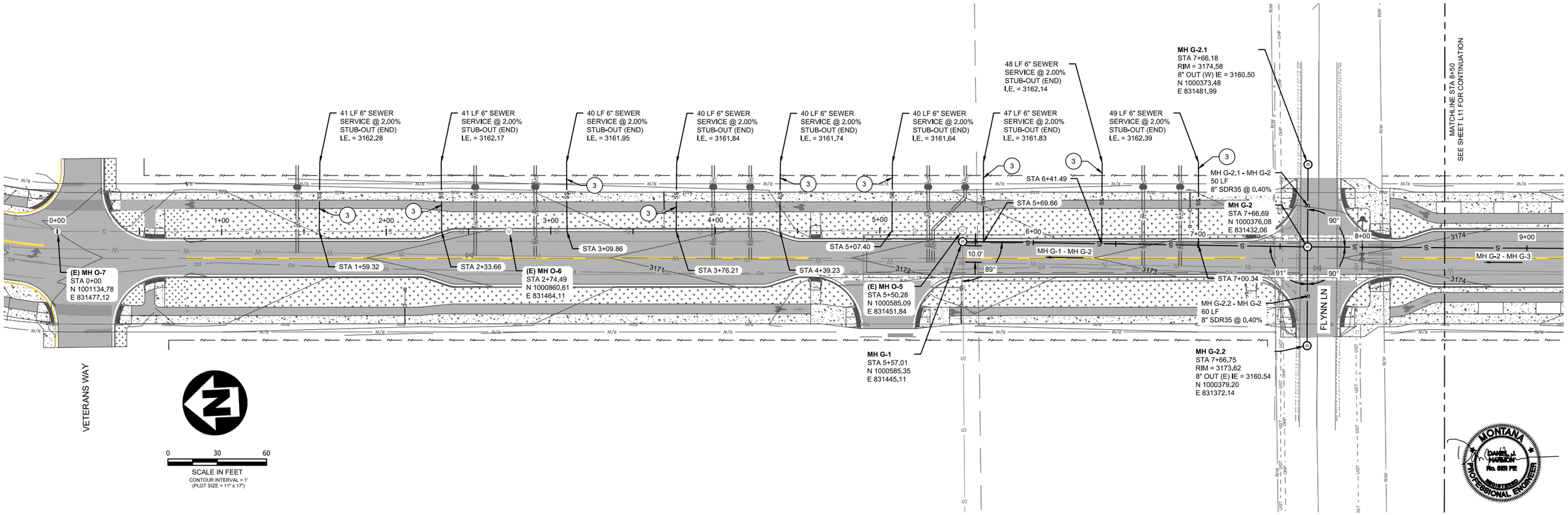

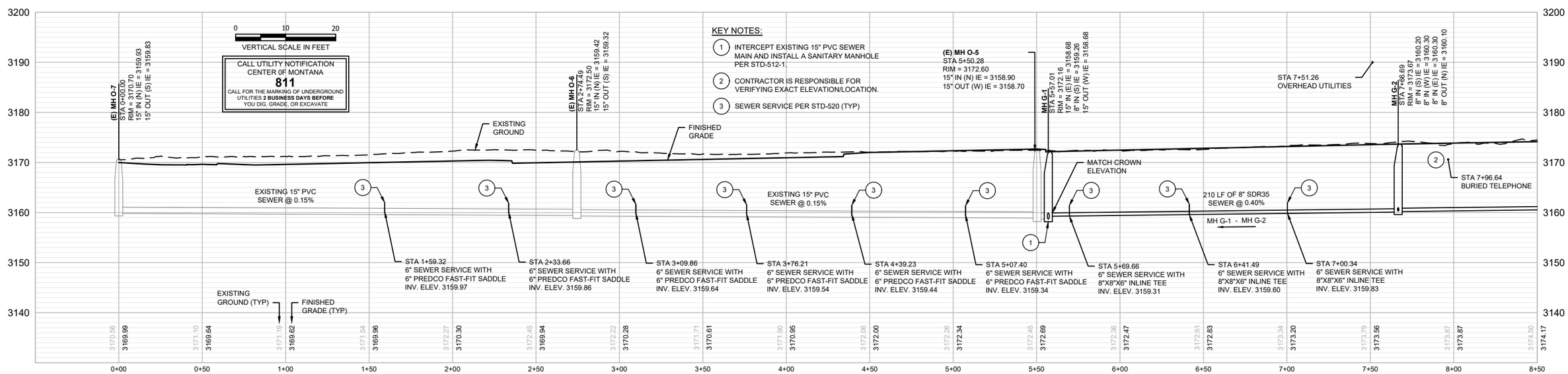

REVISION	DATE	DESCRIPTION
-	-	-

DESIGNER DH PROJ. NO. 7065
DRAWN JW DATE 04/12/2021
CHECKED CC SURVEYED DJ&A, P.C.

HDR

MULLAN BUILD - SANITARY SEWER UTILITY
100% - BID PLANS

LINE 'G' - MARY JANE BLVD. (NORTH)

SHEET L10 OF L14

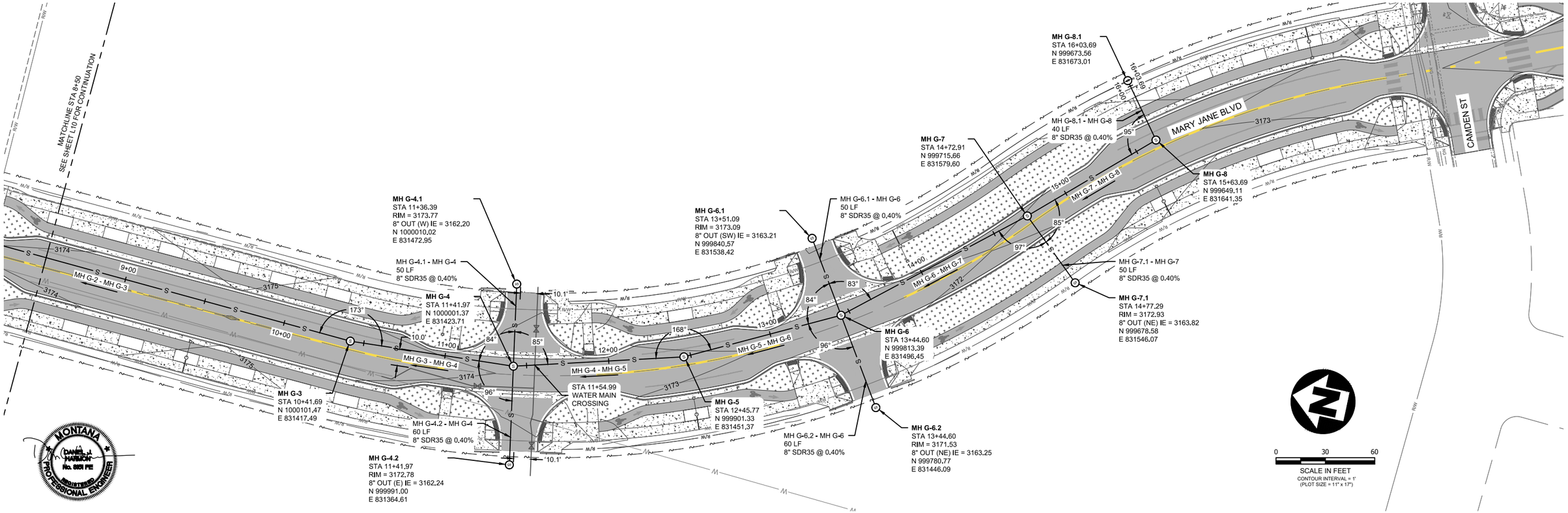

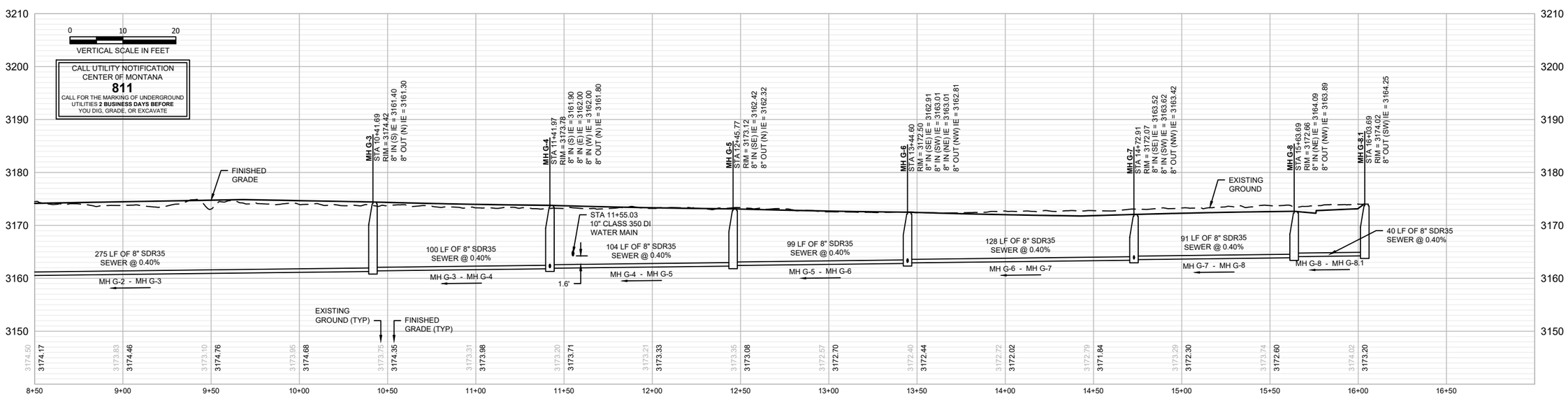

REVISION	DATE	DESCRIPTION
-	-	-

DESIGNER DH PROJ. NO. 7065
DRAWN JW DATE 04/12/2021
CHECKED CC SURVEYED DJ&A, P.C.

HDR

MULLAN BUILD - SANITARY SEWER UTILITY
100% - BID PLANS

LINE 'G' - MARY JANE BLVD. (NORTH)

SHEET L11 OF L14

LINE 'A' - GEORGE ELMER DR (SOUTH)						
MANHOLE NO.	STATION	NORTHING	EASTING	MH RIM ELEV	MH SIZE (DIA)	CONNECTED PIPES
(E) MH C-23	0+00	994832.159	827498.744	3155.16	4' - 0"	8" IN (N) = 3140.87 12" IN (E) = 3140.54 12" OUT (W) = 3140.49
MH A-1	0+15.65	994847.682	827496.779	3154.95	4' - 0"	8" IN (NE) = 3141.13 8" OUT (S) = 3140.93
MH A-2	0+97.44	994897.250	827561.842	3153.35	4' - 0"	8" IN (N) = 3141.66 8" OUT (SW) = 3141.46
MH A-3	3+51.55	995151.176	827571.384	3153.84	4' - 0"	8" IN (N) = 3142.78 8" OUT (S) = 3142.68
MH A-4	6+11.13	995410.428	827584.593	3155.99	4' - 0"	8" IN (E) = 3144.01 8" OUT (S) = 3143.81
MH A-5	6+28.98	995413.146	827602.233	3156.27	4' - 0"	8" OUT (W) = 3144.09

LINE 'B' - GEORGE ELMER DR (SOUTH)						
MANHOLE NO.	STATION	NORTHING	EASTING	MH RIM ELEV	MH SIZE (DIA)	CONNECTED PIPES
MH B-1	0+00	996074.824	827515.849	3155.42	4' - 0"	8" OUT (E) = 3149.89
MH B-2	1+19.94	996068.721	827635.633	3155.39	4' - 0"	8" IN (W) = 3149.41

LINE 'C' - GEORGE ELMER DR (NORTH)						
MANHOLE NO.	STATION	NORTHING	EASTING	MH RIM ELEV	MH SIZE (DIA)	CONNECTED PIPES
(E) MH# 2 P-07-019	0+00	997881.829	827682.723	3156.95	4' - 0"	8" IN (E) = 3143.04 8" IN (N) = 3142.94 8" OUT (S) = 3142.84
MH C-1	2+80	998161.469	827696.917	3155.36	4' - 0"	8" OUT (S) = 3144.06

LINE 'D' - GEORGE ELMER DR (NORTH)						
MANHOLE NO.	STATION	NORTHING	EASTING	MH RIM ELEV	MH SIZE (DIA)	CONNECTED PIPES
MH D-1	0+00	998236.563	827610.160	3154.97	4' - 0"	18" IN (E) = 3143.39 18" OUT (W) = 3143.29 *
MH D-2	0+90	998231.818	827700.035	3155.12	4' - 0"	18" IN (N) = 3143.70 18" OUT (W) = 3143.50
MH D-3	4+19.95	998561.056	827722.432	3156.70	4' - 0"	18" IN (N) = 3144.19 18" OUT (S) = 3144.09
MH D-4	7+58.33	998898.743	827743.994	3156.38	4' - 0"	18" IN (N) = 3144.70 18" OUT (S) = 3144.60
MH D-5	10+96.70	999236.430	827765.556	3154.80	4' - 0"	8" IN (E) = 3145.30 18" IN (N) = 3145.20 18" OUT (S) = 3145.10
MH D-6	11+36.70	999276.349	827768.105	3154.93	4' - 0"	18" OUT (S) = 3145.25

LINE 'E' - ENGLAND BLVD						
MANHOLE NO.	STATION	NORTHING	EASTING	MH RIM ELEV	MH SIZE (DIA)	CONNECTED PIPES
MH E-1	2+50	999226.921	828015.376	3155.69	4' - 0"	8" IN (E) = 3146.40 8" OUT (W) = 3146.30
MH E-2	5+00	999221.699	828265.321	3157.24	4' - 0"	8" IN (E) = 3147.50 8" OUT (W) = 3147.40
MH E-3	6+00	999233.512	828364.621	3158.80	4' - 0"	8" IN (E) = 3148.00 8" OUT (W) = 3147.90
MH E-4	9+25	999218.050	828689.253	3158.06	4' - 0"	8" IN (E) = 3149.40 8" OUT (W) = 3149.30
MH E-5	13+00	999198.307	829063.733	3159.93	4' - 0"	8" IN (E) = 3151.00 8" OUT (W) = 3150.90
MH E-6	16+50	999179.871	829413.247	3161.68	4' - 0"	8" IN (E) = 3152.50 8" OUT (W) = 3152.40
MH E-7	19+00	999166.703	829662.900	3162.93	4' - 0"	8" OUT (W) = 3153.50

LINE 'F' - ENGLAND BLVD						
MANHOLE NO.	STATION	NORTHING	EASTING	MH RIM ELEV	MH SIZE (DIA)	CONNECTED PIPES
(E) MH N-23	0+00	999195.657	829732.389	3160.40	6' - 0"	12" IN (E) = 3152.83 30" IN (N) = 3151.38 30" OUT (S) = 3151.33
MH F-1	0+89.96	999167.860	829817.950	3163.19	4' - 0"	12" IN (SE) = 3153.13 12" OUT (W) = 3153.03
MH F-2	1+87.43	999119.374	829902.506	3162.63	4' - 0"	12" IN (SE) = 3153.44 8" IN (NE) = 3153.54 12" OUT (NW) = 3153.34
MH F-2.1	1+94.90	999134.958	829933.704	3162.46	4' - 0"	8" OUT (SW) = 3153.68
MH F-3	3+20.71	999015.654	829986.206	3161.86	4' - 0"	8" IN (NE) = 3153.94 12" OUT (NW) = 3153.74
MH F-4	3+52.71	999029.967	830014.827	3161.77	4' - 0"	8" OUT (SW) = 3154.06

LINE 'G' - MARY JANE BLVD (NORTH)						
MANHOLE NO.	STATION	NORTHING	EASTING	MH RIM ELEV	MH SIZE (DIA)	CONNECTED PIPES
MH G-1	5+57.01	1000585.355	831445.112	3172.16	4' - 0"	15" IN (E) = 3158.68 8" IN (S) = 3159.26 15" OUT (W) = 3158.68
MH G-2	7+66.69	1000376.079	831432.061	3173.67	4' - 0"	8" IN (S) = 3160.20 8" IN (W) = 3160.30 8" IN (E) = 3160.30 8" OUT (N) = 3160.10
MH G-2.1	7+66.18	1000373.478	831481.993	3174.58	4' - 0"	8" OUT (W) = 3160.50
MH G-2.2	7+66.75	1000379.201	831372.142	3173.62	4' - 0"	8" OUT (E) = 3160.54
MH G-3	10+41.69	1000101.465	831417.494	3174.42	4' - 0"	8" IN (S) = 3161.40 8" OUT (N) = 3161.30
MH G-4	11+41.97	1000001.375	831423.707	3173.78	4' - 0"	8" IN (S) = 3161.90 8" IN (E) = 3162.00 8" IN (W) = 3162.00 8" OUT (N) = 3161.80
MH G-4.1	11+36.39	1000010.022	831472.953	3173.77	4' - 0"	8" OUT (W) = 3162.20
MH G-4.2	11+41.97	999990.998	831364.611	3172.78	4' - 0"	8" OUT (E) = 3162.24
MH G-5	12+45.77	999901.331	831451.368	3173.12	4' - 0"	8" IN (SE) = 3162.42 8" OUT (N) = 3162.32
MH G-6	13+44.60	999813.389	831496.449	3172.50	4' - 0"	8" IN (SE) = 3162.91 8" IN (SW) = 3163.01 8" IN (NE) = 3163.01 8" OUT (NW) = 3162.81
MH G-6.1	13+51.09	999840.569	831538.416	3173.09	4' - 0"	8" OUT (SW) = 3163.21
MH G-6.2	13+44.60	999780.772	831446.089	3171.53	4' - 0"	8" OUT (NE) = 3163.25
MH G-7	14+72.91	999715.660	831579.605	3172.07	4' - 0"	8" IN (SE) = 3163.52 8" IN (SW) = 3163.62 8" OUT (NW) = 3163.42
MH G-7.1	14+77.29	999678.575	831546.070	3172.93	4' - 0"	8" OUT (NE) = 3163.82
MH G-8	15+63.69	999649.111	831641.347	3172.66	4' - 0"	8" IN (NE) = 3164.09 8" OUT (NW) = 3163.89
MH G-8.1	16+03.69	999673.560	831673.006	3174.02	4' - 0"	8" OUT (SW) = 3164.25

NOTES:

1. (E) DESIGNATES AN EXISTING MANHOLE
2. * FUTURE SEWER (PROPOSED BY OTHERS)

SEWER SUBMITTALS, QUALITY CONTROL & ASSURANCE, INSPECTIONS, AND TESTING

1. CONTRACTOR IS RESPONSIBLE TO COMPLY WITH THE CONTRACTOR QUALITY CONTROL AND OWNER QUALITY ASSURANCE OF MPWSS.
2. CONTRACTOR SHALL COMPLETE TRENCH EXCAVATION AND BACKFILL IN ACCORDANCE WITH MPWSS AND CITY OF MISSOULA STANDARDS FOR DESIGN AND CONSTRUCTION.
3. THE CONTRACTOR SHALL COORDINATE WITH ENGINEER TO OBTAIN SAMPLES OF TRENCH BACKFILL MATERIAL TO BE USED ON-SITE. SELECT TRENCH BACKFILL MATERIAL AND FLOW-ABLE FILL WILL BE REQUIRED IN AREAS AS SPECIFIED OR DIRECTED BY THE ENGINEER.
4. CONTRACTOR WILL BE RESPONSIBLE FOR COORDINATION WITH A MATERIAL TESTING COMPANY OF THE OWNER'S SELECTION TO COMPLETE COMPACTION TESTING OF TRENCH BACKFILL. COORDINATION INCLUDES UPDATING APPROPRIATE PERSONNEL OF THE MATERIAL TESTING COMPANY EVERY DAY AS TO PROGRESS OF WORK SO ADEQUATE TESTING CAN BE COMPLETED.
5. THE CONTRACTOR WILL BE REQUIRED TO PREPARE A SET OF DETAILED AS-BUILT DRAWINGS TO BE PRESENTED TO THE ENGINEER AT THE COMPLETION OF THE PROJECT. THE AS-BUILT DRAWINGS SHALL BE UPDATED DAILY AND REVIEWED WEEKLY BY THE PROJECT ENGINEER. AS-BUILT DRAWINGS SHALL INCLUDE, BUT NOT LIMITED TO LOCATION/DEPTHS OF UTILITIES, CULVERTS, DRAINAGE STRUCTURES, ETC.
6. CONTRACTOR WILL BE RESPONSIBLE FOR COMPLETING SEWER DITCH CARDS FOR ALL SEWER SERVICES. INFORMATION ON THE DITCH CARDS MUST BE PROVIDED AS DIRECTED BY ENGINEER INCLUDING LOT NUMBER OR BUILDING ADDRESS SERVED; AS-BUILT SERVICE CONNECTION TO THE SEWER MAIN RELATIVE TO STATIONING ON THE DRAWINGS; SIZE, LENGTH, AND MATERIAL OF SEWER SERVICE PIPE; LOCATION AND TYPE OF BENDS ALONG SERVICE; AND DEPTHS OF SEWER SERVICE. ENGINEER WILL PROVIDE CONTRACTOR WITH EXAMPLE DITCH CARD UPON WRITTEN REQUEST. ONE SEWER DITCH CARD SHALL BE COMPLETED FOR EACH SEWER SERVICE.
7. SANITARY SEWER TESTING SHALL BE COMPLETED IN THE PRESENCE OF THE ENGINEER. THE CONTRACTOR IS RESPONSIBLE FOR COORDINATING WITH THE ENGINEER TO BE PRESENT FOR SEWER TESTING.
8. SANITARY SEWER TESTING SHALL BE DONE IN ACCORDANCE WITH APPENDIX 2A OF THE PUBLIC WORKS MANUAL.
9. TELEVISION INSPECTION SHALL BE PERFORMED IN ACCORDANCE WITH MPWSS. A DEVICE OF KNOWN DIMENSIONS SHALL BE DRUG ALONG THE BOTTOM OF THE SEWER PIPE IN FRONT OF THE CAMERA TO PROVIDE A CONTINUOUS VISUAL REFERENCE OF THE DEPTH OF WATER PONDS IN THE SEWER PIPE. THE DEVICE SHALL BE DRUG NO MORE THAN FOUR FEET IN FRONT OF THE CAMERA.
10. TEST MANHOLES IN ACCORDANCE WITH ASTM C1244-93. TEST METHOD FOR CONCRETE SEWER MANHOLES BY THE NEGATIVE AIR PRESSURE (VACUUM) TEST. VACUUM TEST SHALL BE COMPLETED BY PULLING A VACUUM OF 10" HG (4.9 PSI) AND MEASURING THE TIME IT TAKES TO DROP TO 9" HG (4.4 PSI). TEST SHALL BE COMPLETED ON CONCRETE SURFACE AND NOT ON IRON RING. THE MINIMUM ACCEPTABLE TIME FOR AN 8' OR LESS DEEP MANHOLE SHALL BE 20 SECONDS. FIVE SECONDS SHALL BE ADDED TO THE MINIMUM ACCEPTABLE TIME FOR EVERY TWO FEET IN DEPTH BEYOND 8'.

MONTANA DANIEL J. HARMON No. 9801 PE PROFESSIONAL ENGINEER

REVISION	DATE	DESCRIPTION
-	-	-

DESIGNER DH PROJ. NO. 7065
DRAWN JW DATE 04/12/2021
CHECKED CC SURVEYED DJ&A, P.C.

HDR

MULLAN BUILD - SANITARY SEWER UTILITY
100% - BID PLANS

MANHOLE SCHEDULE

SHEET L12 OF L14

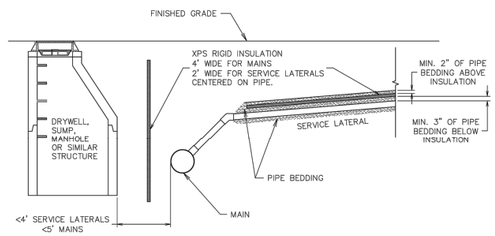

GENERAL NOTES:

1. INSULATION IS REQUIRED WHEN A SANITARY SEWER PIPE IS LESS THAN 4 FEET FOR A SERVICE LATERAL, AND LESS THAN 5 FEET FOR A SEWER MAIN, FROM FINISHED GRADE, A DRYWELL SUMP, IRRIGATION PIPE OR ANY STRUCTURE THAT HAS THE POTENTIAL TO TRANSFER COLD OR PROMOTE FREEZING.
2. PROVIDE TWO INCHES OF INSULATION THICKNESS, EQUIVALENT TO AN R-VALUE OF 10, PER FOOT OF MISSING COVER OR VOID SPACE LESS THAN FIVE FEET.
3. USE A HIGH DENSITY, RIGID INSULATION (PINK BOARD) WITH 35 PSI OR GREATER RATING IN TRAFFIC AREAS.

MISSOULA Engineering Division | Sanitary Sewer Service and Main Insulation Requirements | Approved By Utility Project Manager – Ross Mollenhauer, PE | Revised: 09/28/2020 | STD - 500

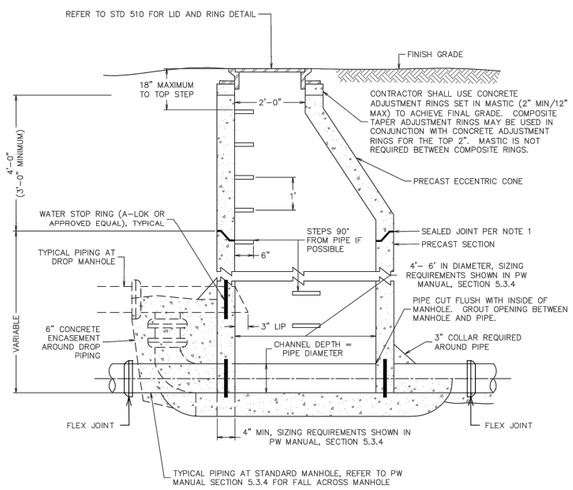

GENERAL NOTES:

1. ALL JOINTS BETWEEN MANHOLE SECTIONS, ADJUSTING RINGS, MANHOLE RING AND TOP SECTION, SHALL BE WATERTIGHT. JOINTING MATERIAL SHALL BE "RAM-NEK®" OR EQUAL.
2. CONCRETE FOR DROP STRUCTURES SHALL BE FORMED.
3. BOLT-DOWN LIDS WILL BE REQUIRED AS PER STD 510. DUSTPANS ARE NOT REQUIRED WITH BOLT-DOWN LIDS.

MISSOULA Engineering Division | Sanitary Sewer Manhole (Sheet 1 of 3) | Approved By Utility Project Manager – Ross Mollenhauer, PE | Revised: 09/28/2020 | STD - 512-1

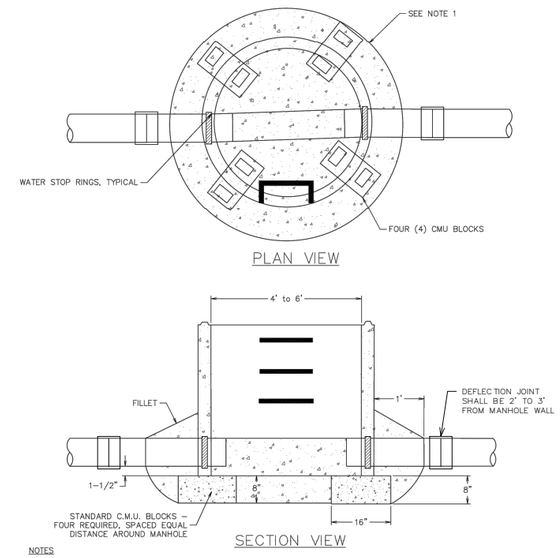

NOTES

1. BASE AND FILL CONCRETE MAY BE POURED MONOLITHICALLY.
2. ONE-HALF (1/2") INCH SPACING MAY BE OMITTED WHEN BASE AND FILL CONCRETE ARE POURED MONOLITHICALLY.

MISSOULA Engineering Division | Sanitary Sewer Manhole - Dog House Base (Sheet 2 of 3) | Approved By Utility Project Manager – Ross Mollenhauer, PE | Revised: 09/28/2020 | STD - 512-2

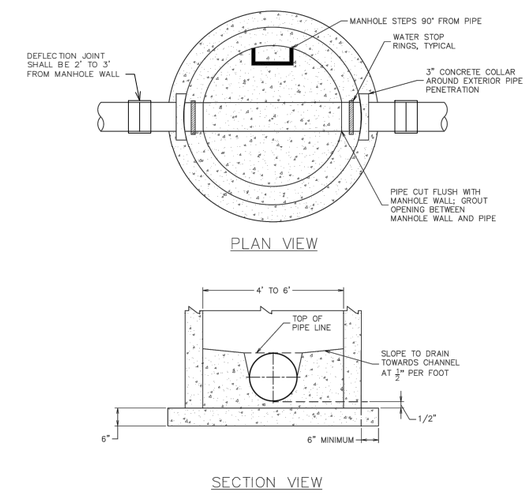

MISSOULA Engineering Division | Sanitary Sewer Manhole - Precast Base (Sheet 3 of 3) | Approved By Utility Project Manager – Ross Mollenhauer, PE | Revised: 09/28/2020 | STD - 512-3

MONTANA DANIEL HANSON No. 8851 PE REGISTERED PROFESSIONAL ENGINEER

REVISION	DATE	DESCRIPTION
-	-	-

DESIGNER DH | PROJ. NO. 7065
DRAWN JW | DATE 04/12/2021
CHECKED CC | SURVEYED DJ&A, P.C.

HDR

MULLAN BUILD - SANITARY SEWER UTILITY
100% - BID PLANS

STANDARD SEWER DETAILS - 1

SHEET L13 OF L14

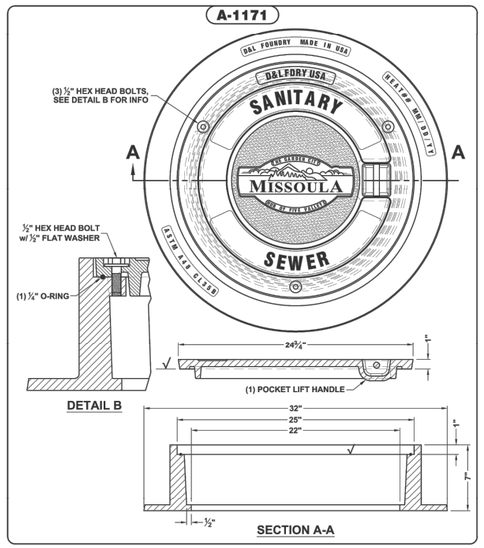

PRODUCT NUMBER:	MATERIAL TYPE:
COVER: A-1171	GRAY IRON: ASTM A-48 CL 35B
RING: A-1171-R1	GRAY IRON: ASTM A-48 CL 35B

GENERAL NOTES:

1. D&L FOUNDRY A-1171 BOLT DOWN, WATER TIGHT LIDS ARE REQUIRED FOR ALL CITY-OWNED AND PRIVATELY-OWNED MANHOLES. PRIVATELY OWNED MANHOLES SHALL BE LABELLED WITH THE WORDS "SANITARY SEWER", BUT SHALL NOT USE THE CITY OF MISSOULA LOGO.
2. PROVIDE LIDS AND RINGS THAT MEET AASHTO 306 HS20 LOADING RATING OR HIGHER.
3. A 4-INCH MANHOLE RING MAY BE USED IN LIEU OF A 7-INCH RING ONLY WITH PRIOR APPROVAL FROM CITY ENGINEERING.

Engineering Division	Sanitary Sewer Lid		
	Approved By Utility Project Manager – Ross Mollenhauer, PE	Revised: 09/28/2020	STD - 510

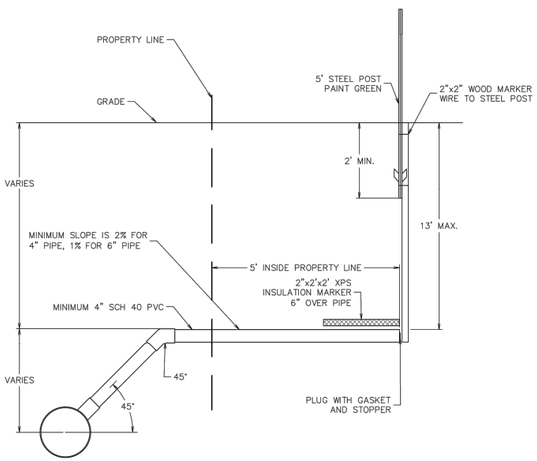

GENERAL NOTES:

1. MAXIMUM LINE DEPTH IS 13'. DEVIATIONS MAY BE ALLOWED BY CITY ENGINEERING.
2. CONNECTIONS TO EXISTING SEWER MAINS SHALL BE TAPPED AT THE CONTRACTORS EXPENSE, AND PREDCO FAST FIT SADDLES OR APPROVED EQUAL SHALL BE USED. WHEN THE SEWER MAIN AND SEWER SERVICE LATERALS ARE INSTALLED UNDER ONE CONTRACT, IN-LINE TEES ONLY SHALL SHALL BE PROVIDED FOR THE SERVICE LATERALS. TEES SHALL BE ROLLED TO A 45 DEGREE ANGLE.
3. AN EXCAVATION PERMIT IS REQUIRED FOR EACH STUB.
4. SEWER SERVICE STUBS SHALL BE INSTALLED WHERE SHOWN ON THE DRAWINGS OR AS SPECIFIED BY CITY ENGINEERING.
5. IN ORDER TO KEEP SERVICE LINES DEEP ENOUGH TO SERVE EACH HOME AND PASS UNDER WATER MAINS, A 22 DEGREE FITTING MAY BE ALLOWED BY THE CITY ENGINEER AT THE SEWER MAIN TAP.
6. ALL COMMERCIAL SERVICE STUBS SHALL BE 6" MINIMUM DIAMETER.
7. ALL SINGLE DWELLING UNIT SERVICE STUBS SHALL BE 4" MINIMUM DIAMETER.

Engineering Division	Standard Sewer Service Stub		
	Approved By Utility Project Manager – Ross Mollenhauer, PE	Revised: 09/28/2020	STD - 520

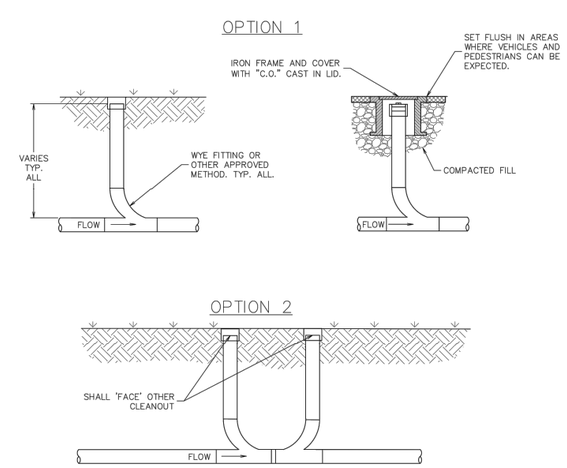

GENERAL NOTES:

1. CLEANOUTS SHALL BE PLACED WITHIN TWO FEET (OR APPROVED DISTANCE) OF THE STRUCTURE AND EVERY 100 FEET OF DISTANCE OR TOTAL CHANGE OF HORIZONTAL DIRECTION OF 135° OR MORE.
2. ALL CLEANOUTS SHALL BE EXTENDED TO FINISHED GRADE. CLEANOUTS INSTALLED UNDER ASPHALT OR CONCRETE SHALL HAVE A METAL RING AND COVER WITH "C.O." CAST IN THE LID SET TO GRADE.
3. CLEANOUTS SHALL BE THE SAME SIZE AND MATERIAL AS THE SANITARY SEWER PIPE.
4. UPON APPROVAL MANHOLES CAN BE SUBSTITUTED FOR CLEANOUTS WITH A MAXIMUM DISTANCE OF 300 FEET BETWEEN MANHOLES.
5. OPTION TWO MUST BE USED WHEN THERE IS NO UP STREAM CLEANOUT OR TERMINAL CLEANOUT.

Engineering Division	Typical Clean-out Details		
	Approved By City Engineer Kevin J. Slovarp	Adopted: 03/2004 Revised: 06/14/2017	STD - 521

MONTANA DANIEL J. HAYMON No. 9821 PE REGISTERED PROFESSIONAL ENGINEER

REVISION	DATE	DESCRIPTION
-	-	-

DESIGNER DH PROJ. NO. 7065
DRAWN JW DATE 04/12/2021
CHECKED CC SURVEYED DJ&A, P.C.

HDR

MULLAN BUILD - SANITARY SEWER UTILITY
100% - BID PLANS

STANDARD SEWER DETAILS - 2

SHEET L14 OF L14